WARRANTY: ALL TANKS MUST BE BACKFILLED AND COMPACTED PRIOR TO FILLING OR WARRANTY IS VOID

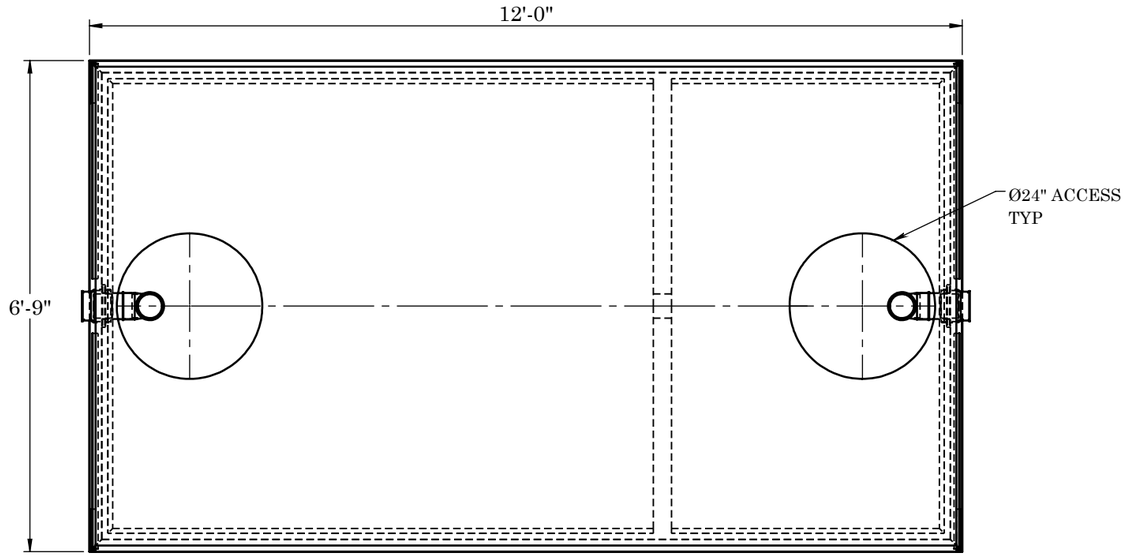

TOP VIEW

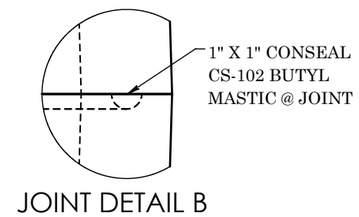

JOINT DETAIL B

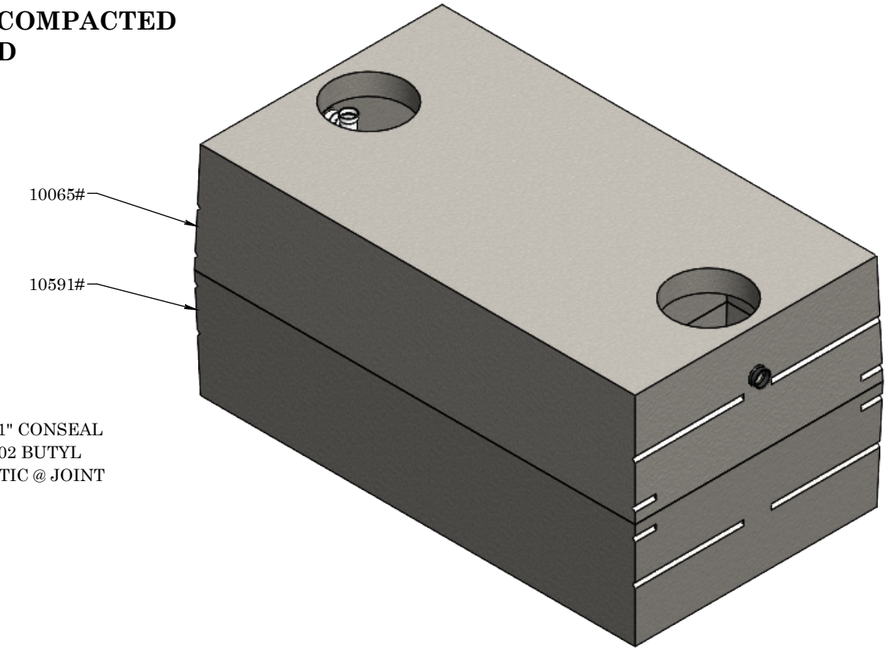

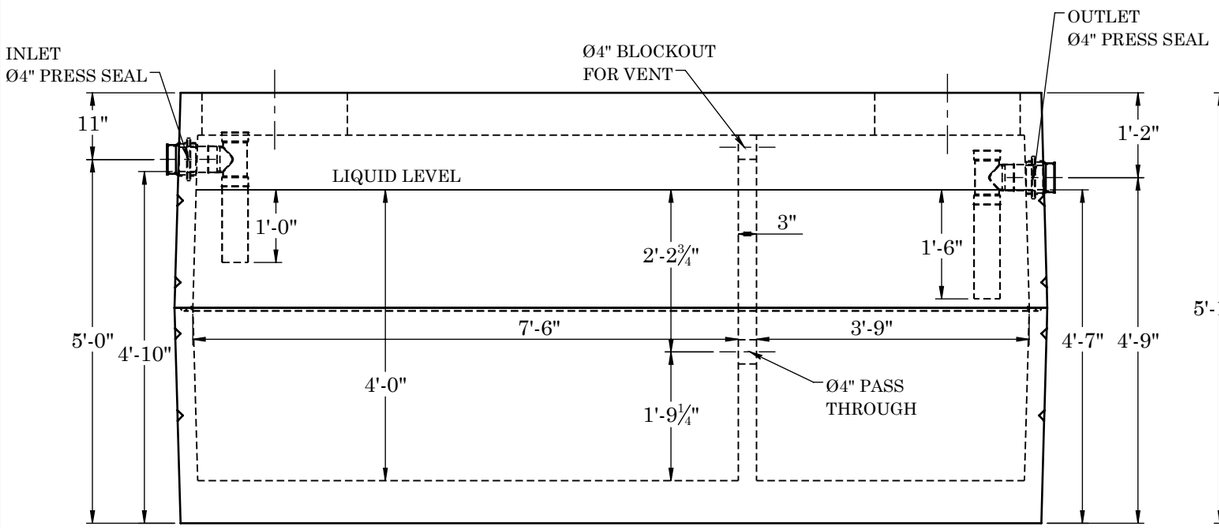

FRONT VIEW

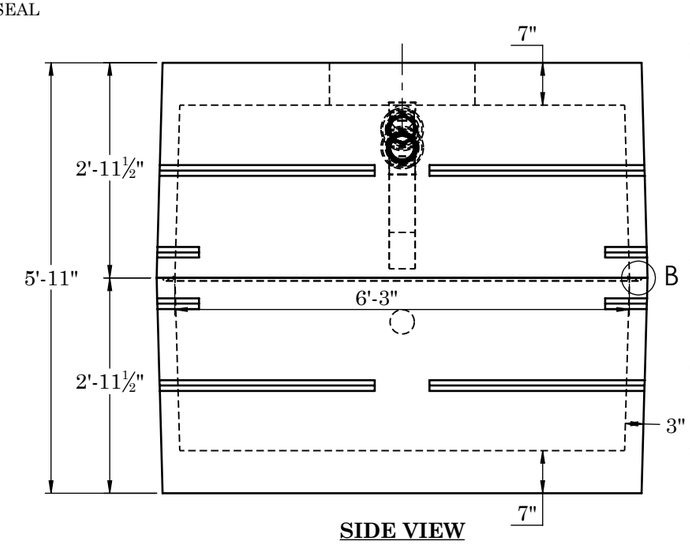

SIDE VIEW

CONCRETE:
TANK CONSTRUCTION UTILIZES 6000 PSI CONCRETE AND GRADE 60 REBAR

GALLON CALCS:
6'-3"W X 7'-6"L X 4'-0" H X 7.48 = 1402 GALLONS
6'-3"W X 3'-9"L X 4'-0"H X 7.48 = 701 GALLONS

RISERS:
PVC: Ø24" AND FIBER COVER (TO GRADE)
CONCRETE: Ø24" X 8" OR 12" (6" BELOW GRADE)

BEDDING:
4" PEA GRAVEL (NO WATER PRESENT)

EXCAVATION:
12" LARGER THAN TANK DIMENSIONS EACH WAY, MAX BURY DEPTH 5'-0"

REINFORCEMENT:

-TOP
-#4 U-BARS @ 5" O.C.E.W.
(2) #4 BARS EACH SIDE OF ACCESS

-SIDES
-#4 BAR @ 5" O.C.E.W.

-BASE
-#4 U-BARS @ 5" O.C.E.W.

2215 E. BROOKLYN AVE
SPOKANE, WA 99217
TOLL FREE 1-800-888-4573
(509) 325-4573 FAX (509) 325-5098
SPOKANE - LEWISTON - YAKIMA
www.wilbertprecast.com

REV: A
DRAWN FOR:
DRAWN BY: DCR

TITLE: 2000 GALLON DOUBLE COMPARTMENT 2-PIECE SEPTIC TANK HEAVY

SIZE	DWG. NO.	SCALE:	DATE:
B	#1638TB	NTS	7/31/2025