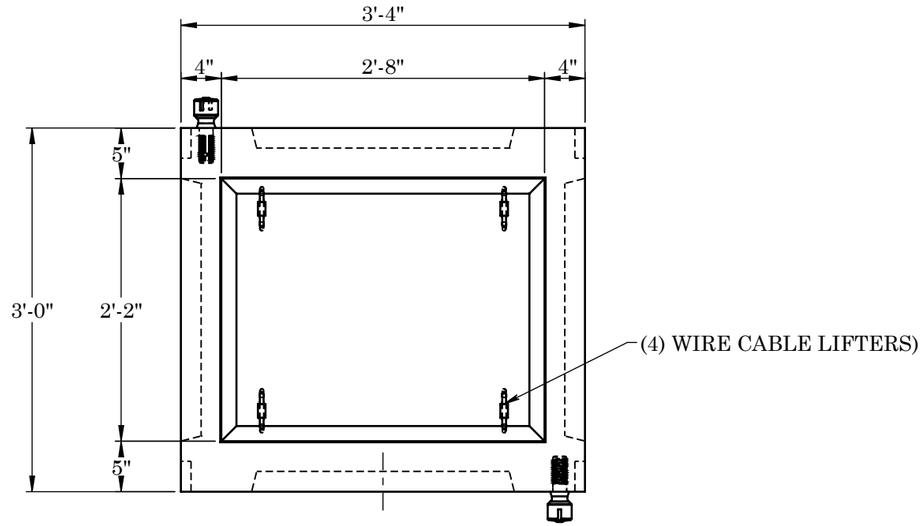

TOP VIEW

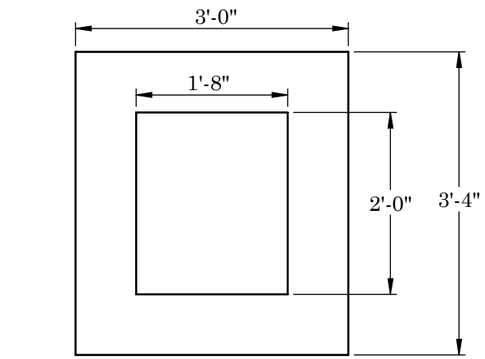

OPTIONAL REDUCING SLAB

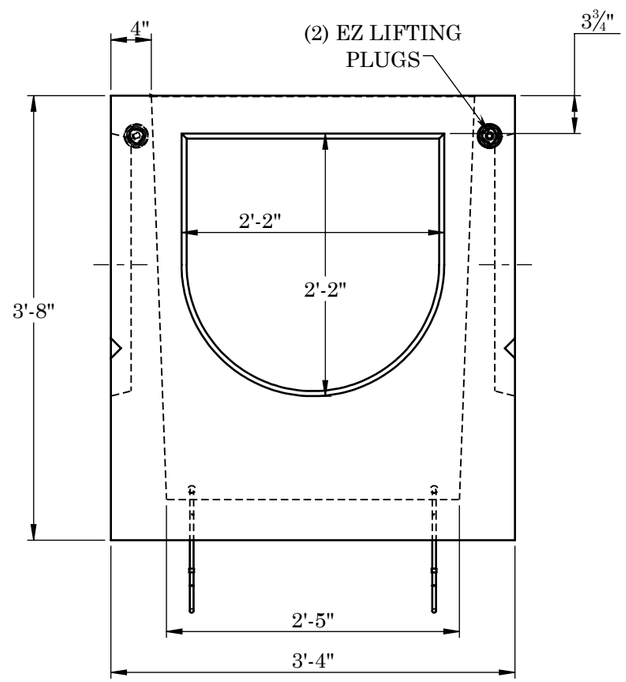

FRONT VIEW

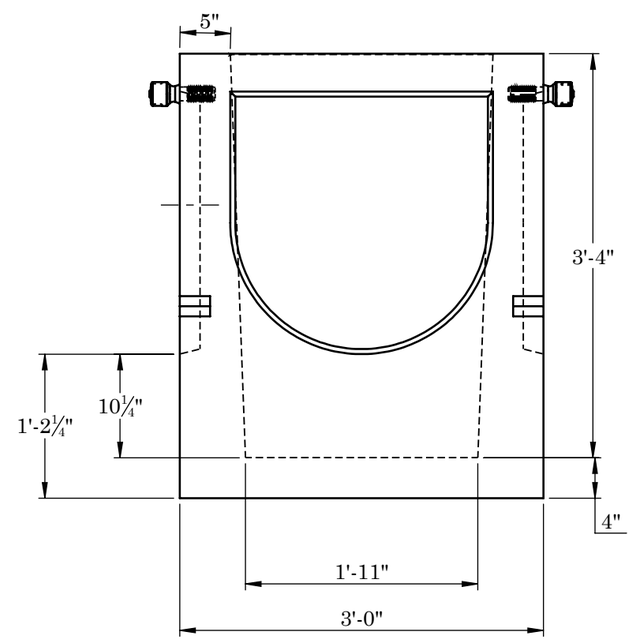

SIDE VIEW

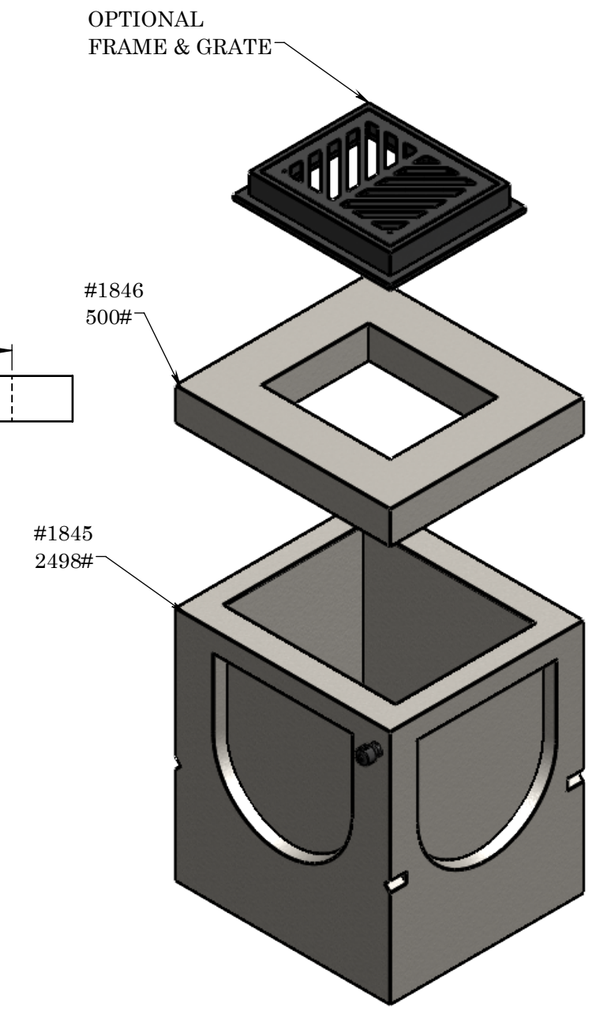

REINFORCEMENT:

#1845
-#3 BAR CAGE PLACED PER WSDOT STD PLAN B-5.40-02
#1846
-#3 BAR HOOP 2" CLR FROM INSIDE & OUTSIDE (CENTERED IN SLAB)
NOTE: REDUCING SLAB IS NEEDED FOR OPTIONAL FRAME & GRATE OR RISER

2215 E. BROOKLYN AVE
SPOKANE, WA 99217
TOLL FREE 1-800-888-4573
(509) 325-4573 FAX (509) 325-5098
SPOKANE - LEWISTON - YAKIMA
www.wilbertprecast.com

REV: A
DRAWN FOR:
DRAWN BY: TH

TITLE: WSDOT TYPE 1L CATCH BASIN WITH REDUCING SLAB

SIZE	DWG. NO.	SCALE:	DATE:
B	**#1845 , #1846**	NTS	7/11/2025