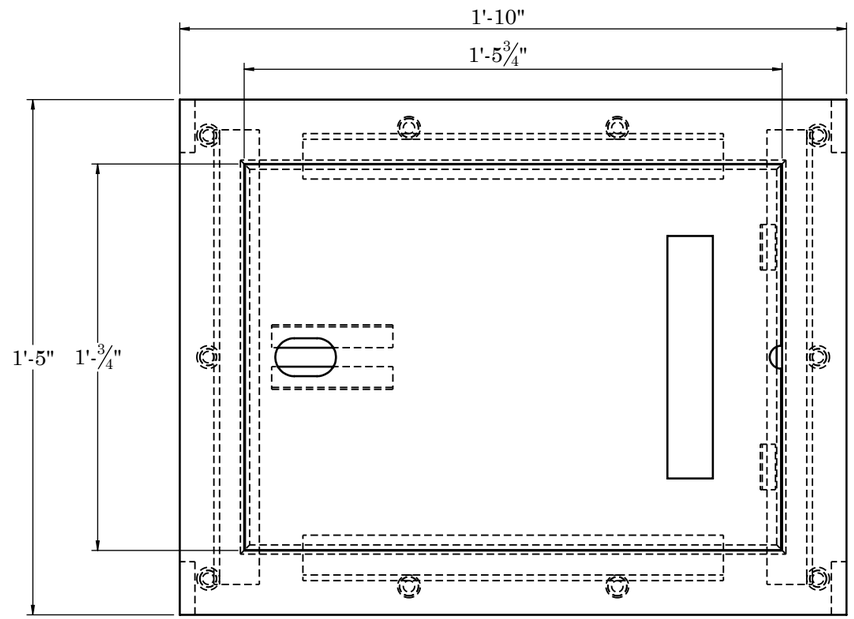

TOP VIEW

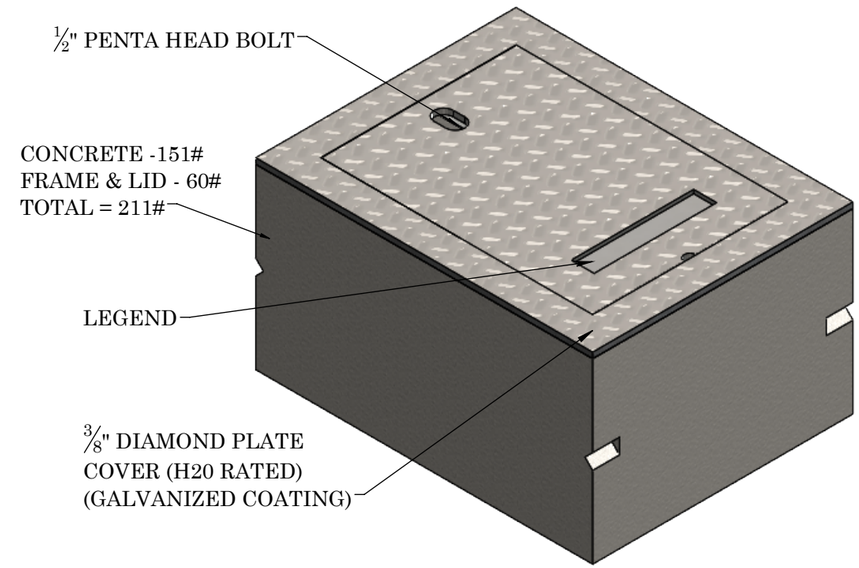

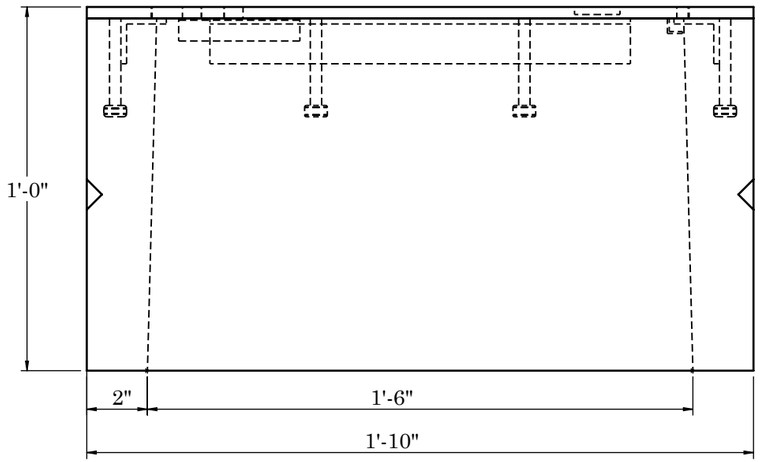

FRONT VIEW

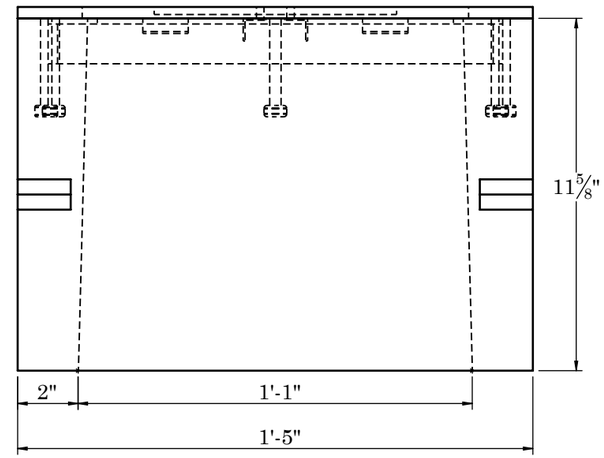

SIDE VIEW

COATING AVAILABLE
-ASPHALT
-THERMION
-GALVANIZED (STANDARD)

LEGENDS AVAILABLE
-ELECTRIC (STANDARD)
-AUDIO
-POWER
-COMM

NOTES:

REINFORCEMENT:
-7 GA WELDED WIRE MESH
-3/8 NELSON STUDS
-100% AMERICAN MADE PRODUCT
-PENTA BOLT LOCKING

2215 E. BROOKLYN AVE
SPOKANE, WA 99217
TOLL FREE 1-800-888-4573
(509) 325-4573 FAX (509) 325-5098
SPOKANE - LEWISTON - YAKIMA
www.wilbertprecast.com

REV:
DRAWN FOR:
DRAWN BY: DCR

TITLE:			
WPJ11-TYPE 1			
SIZE	DWG. NO.	SCALE:	DATE:
B	WPJ11-TYPE 1-ST	NTS	8/1/2025