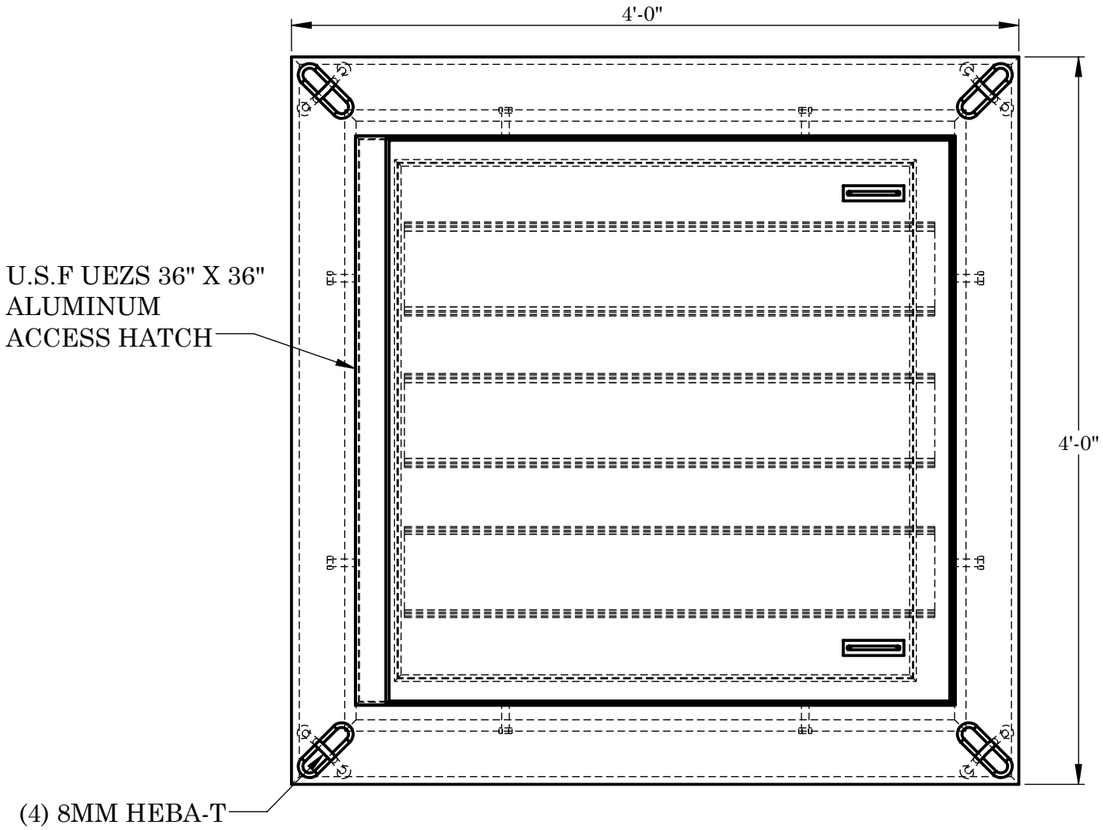

TOP VIEW

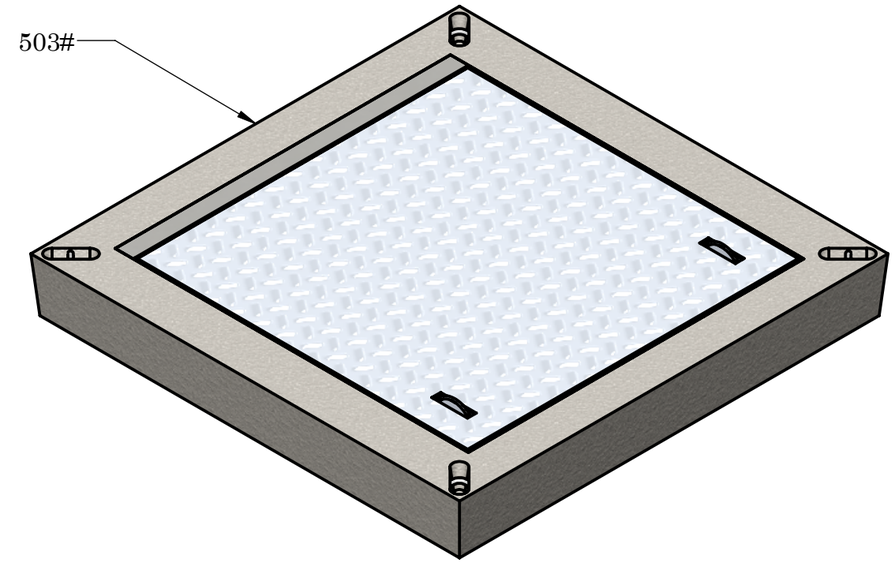

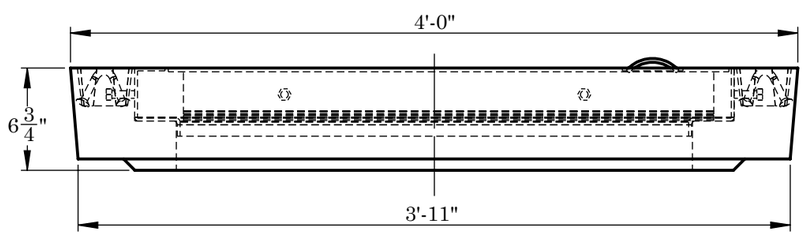

FRONT VIEW

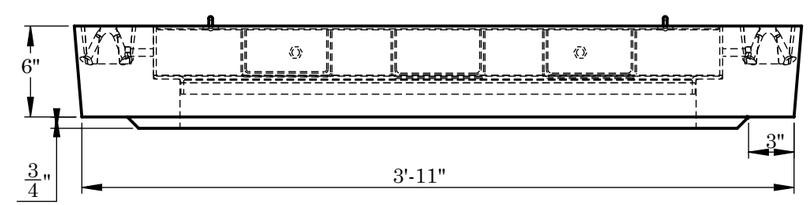

SIDE VIEW

REINFORCEMENT:

REINFORCEMENT:
-#4 BAR @ 6" O.C.E.W. IN LID

2215 E. BROOKLYN AVE
SPOKANE, WA 99217
TOLL FREE 1-800-888-4573
(509) 325-4573 FAX (509) 325-5098
SPOKANE - LEWISTON - YAKIMA
www.wilbertprecast.com

DRAWN BY: TH

TITLE:			
WP444 VAULT LID WITH HATCH CAST-IN			
SIZE	DWG. NO.	SCALE:	DATE:
B	WP44THS	NTS	8/8/2025