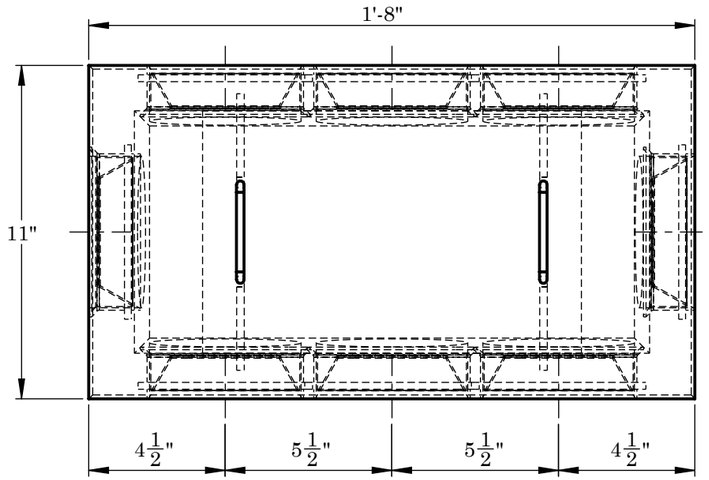

TOP VIEW

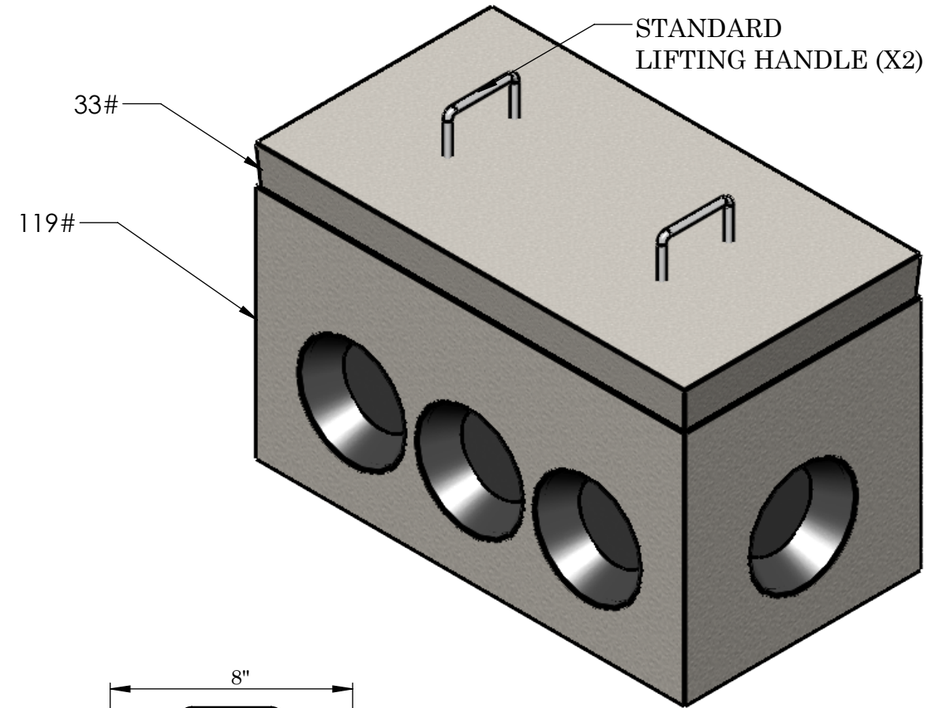

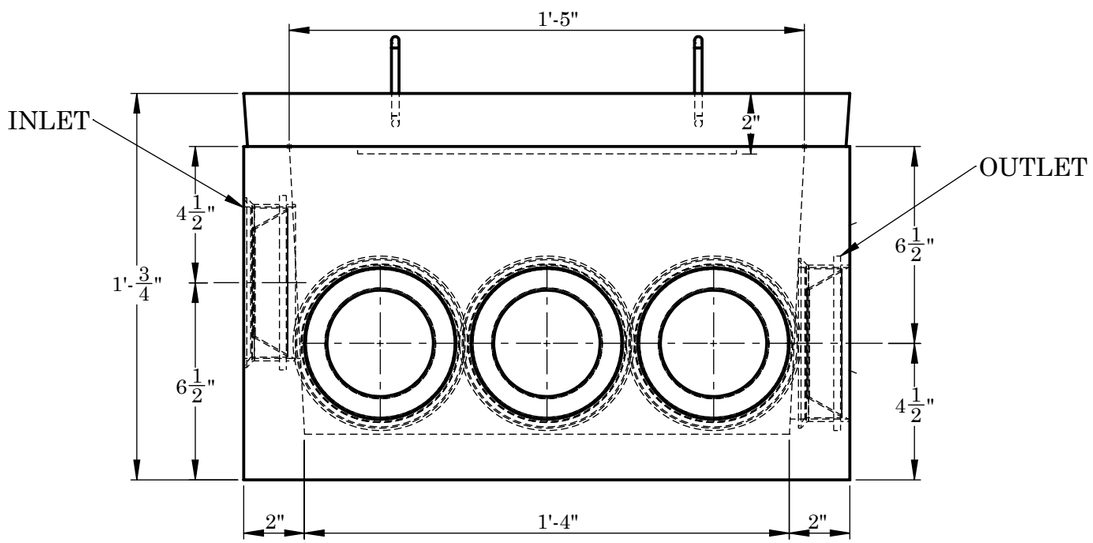

FRONT VIEW

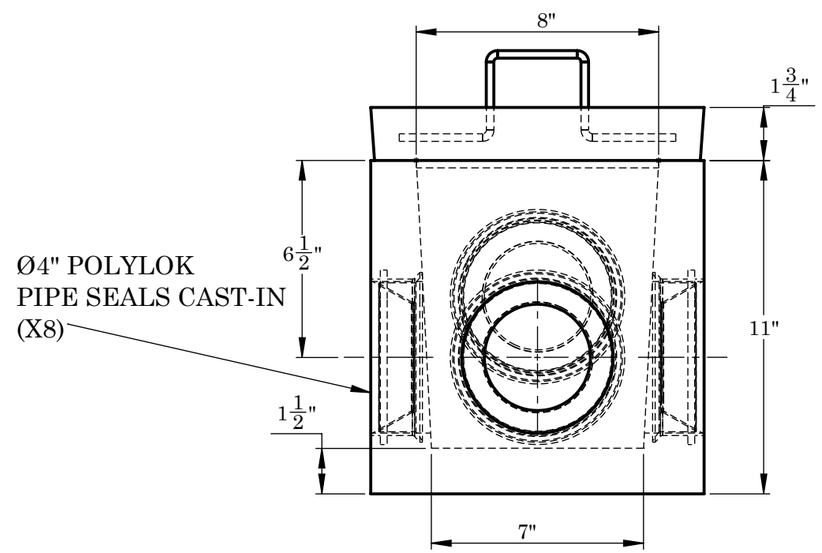

SIDE VIEW

NOTES:

1. Ø4" POLYLOK PIPE SEALS AT INLET AND OUTLETS
2. 4X4 14/14 GALV. MESH IN COVER

2215 E. BROOKLYN AVE
SPOKANE, WA 99217
TOLL FREE 1-800-888-4573
(509) 325-4573 FAX (509) 325-5098
SPOKANE - LEWISTON - YAKIMA
www.wilbertprecast.com

DRAWN BY: TH

TITLE:			
D-BOX - 7 OUTLETS			
SIZE	DWG. NO.	SCALE:	DATE:
B	1651-7	NTS	8/24/2025