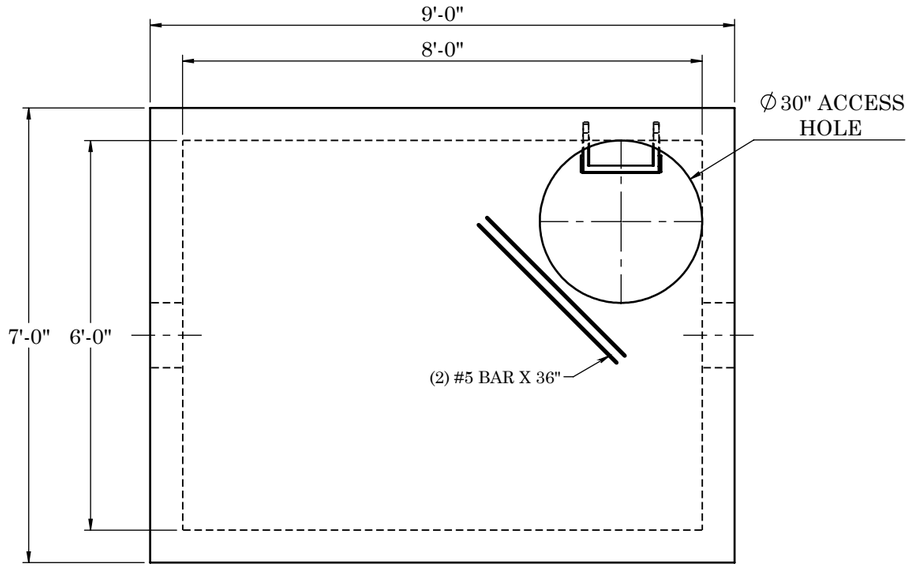

TOP VIEW

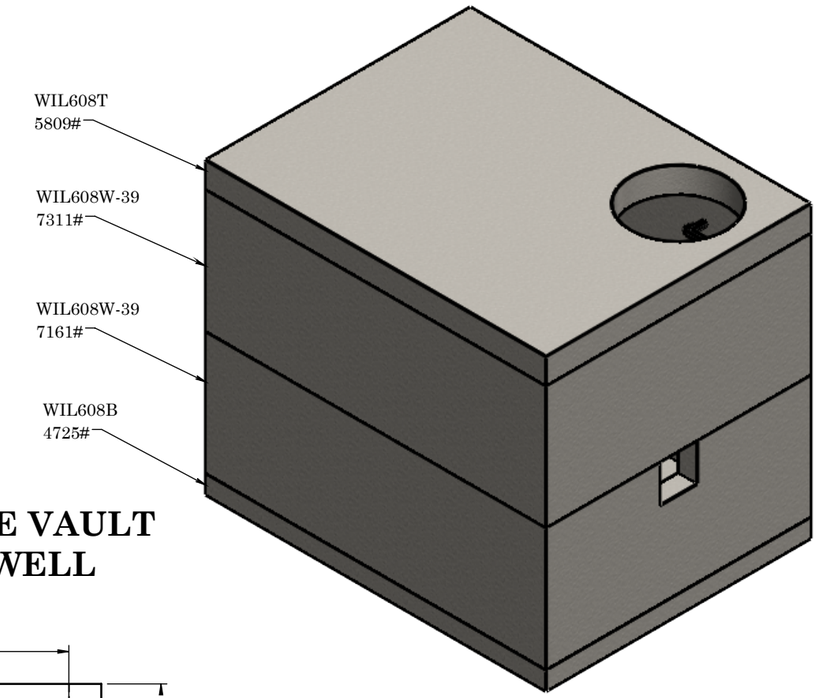

OPTIONAL NO BASE VAULT AVAILABLE AS WELL

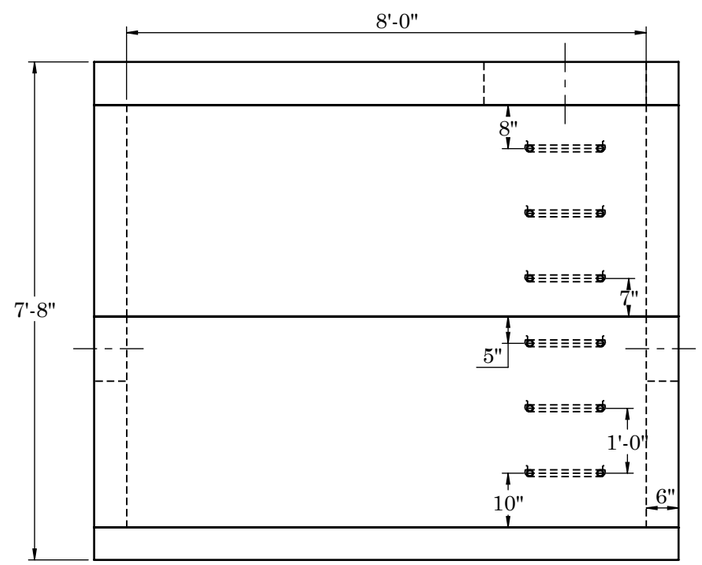

FRONT VIEW

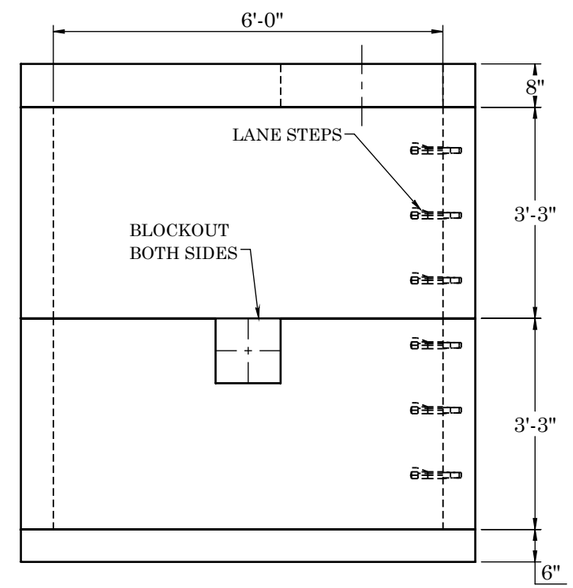

SIDE VIEW

REINFORCEMENT:

-LID & BASE	-#5 BAR @ 5" O.C. TRANSVERSE
	-#5 BAR @ 9" O.C. LONGITUDINAL (CENTERED IN SLAB)
-WALLS	-#4 BAR @ 9" O.C. VERTICAL
	-#5 BAR @ 6" O.C. HORIZONTAL (2" CLR FROM INSIDE)

****HS-20 LOADING, MAX BURY (5'-0") AS PER "AASHTO" STANDARDS****

2215 E. BROOKLYN AVE
SPOKANE, WA 99217
TOLL FREE 1-800-888-4573
(509) 325-4573 FAX (509) 325-5098
SPOKANE - LEWISTON - YAKIMA
www.wilbertprecast.com

REV: A
DRAWN FOR:
DRAWN BY: DCR

TITLE: METER VAULT 6'-0" X 8'-0"
HS-20 LOADING

SIZE	DWG. NO.	SCALE:	DATE:
B	WIL608	NTS	9/5/2025