WARRANTY: ALL TANKS MUST BE BACKFILLED AND COMPACTED PRIOR TO FILLING OR WARRANTY IS VOID

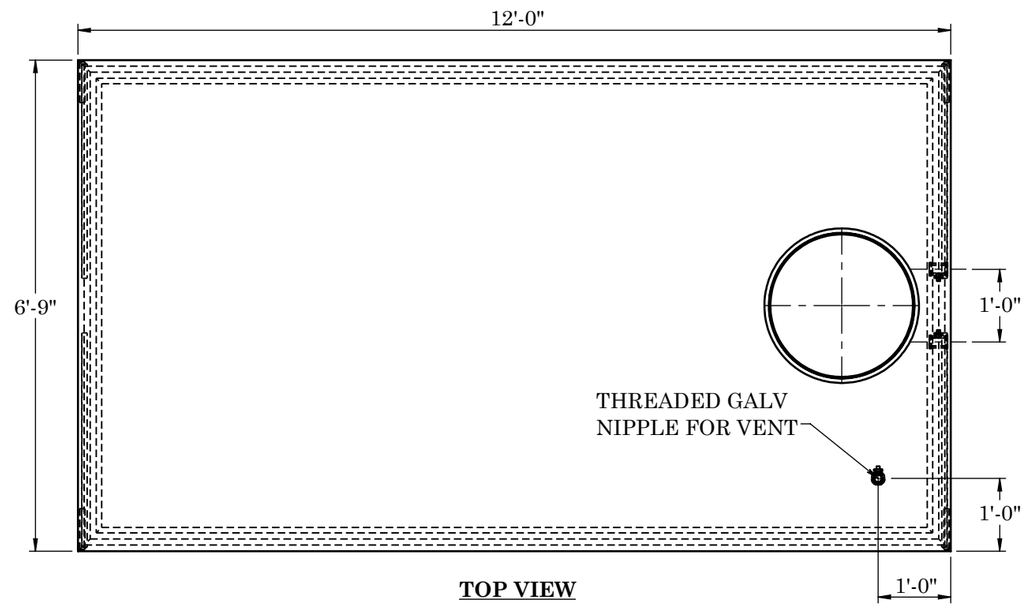

TOP VIEW

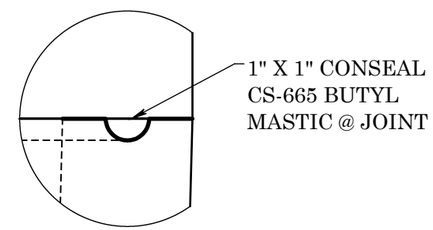

JOINT DETAIL B

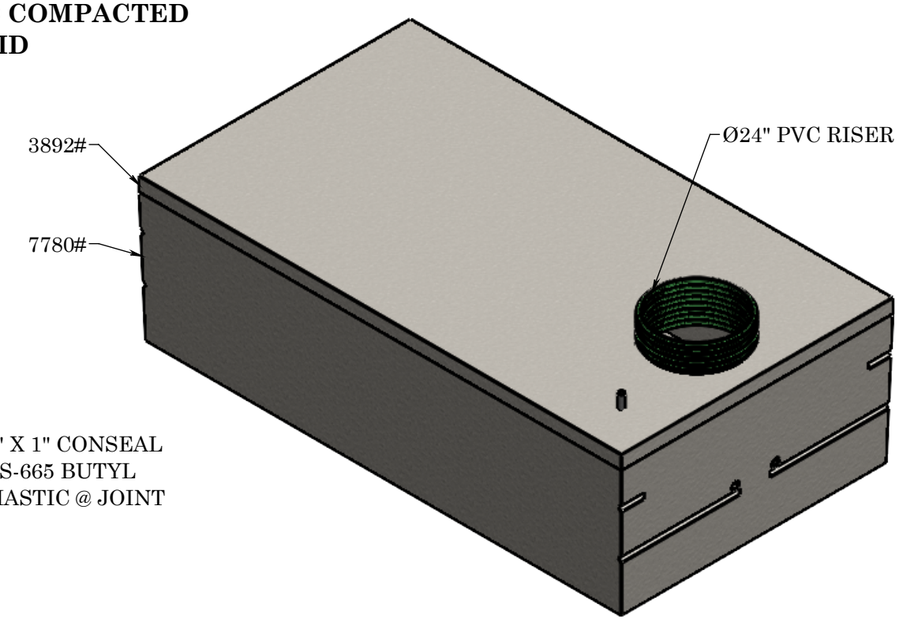

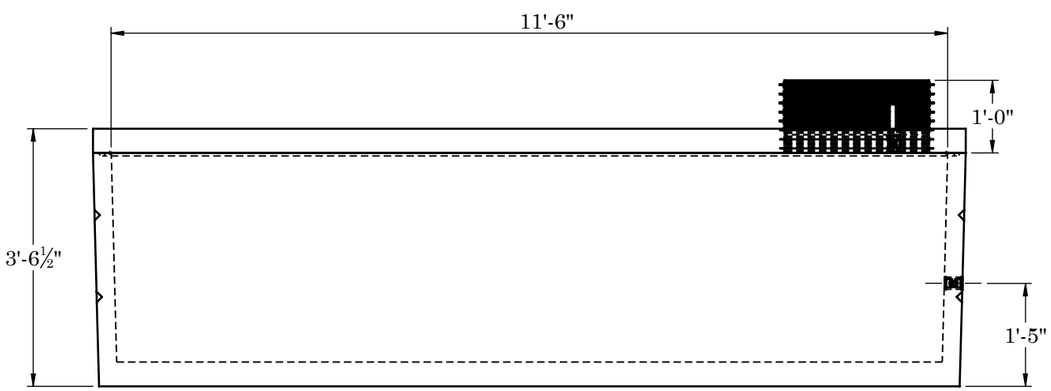

FRONT VIEW

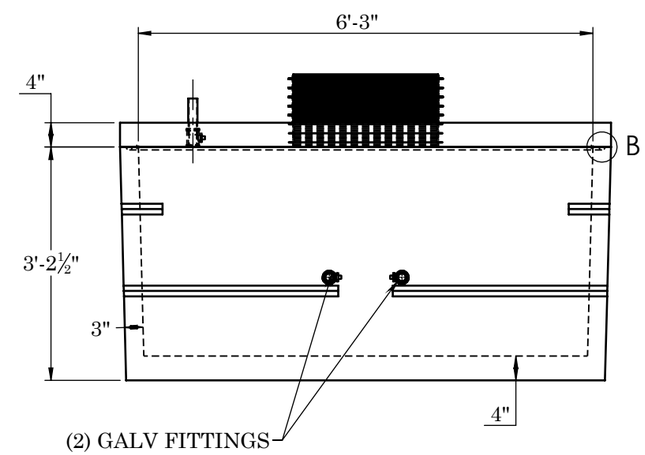

SIDE VIEW

BEDDING:
4" PEA GRAVEL (NO WATER PRESENT)

GALVANIZED FITTING OPTIONS:
Ø1", 1¼", 1½", 2", CUSTOM TANK FITTINGS
CAN BE LOCATED ANYWHERE IN TANK

TOP ACCESS HOLE OPTIONS:
FLANGE ADAPTERS Ø24" OR Ø30"
PVC RISERS Ø24" OR Ø30"
LIDS CAN BE INSULATED OR NON INSULATED

EXCAVATION:
12" LARGER THAN TANK DIMENSIONS
EACH WAY, MAX BURY 3'-0"

REINFORCEMENT:

-LID	-#4 BAR @ 12" O.C.E.W. (CENTERED IN LID)
-BASE	-#4 U-BARS @ 12" O.C.E.W.
-WALLS	-#4 @ 12" O.C. HORIZONTALS

2215 E. BROOKLYN AVE
SPOKANE, WA 99217
TOLL FREE 1-800-888-4573
(509) 325-4573 FAX (509) 325-5098
SPOKANE - LEWISTON - YAKIMA
www.wilbertprecast.com

REV: A
DRAWN FOR:
DRAWN BY: TH

TITLE: 1500 GALLON 2-PIECE WATER TANK

SIZE	DWG. NO.	SCALE:	DATE:
B	**#1719**	NTS	10/29/2025