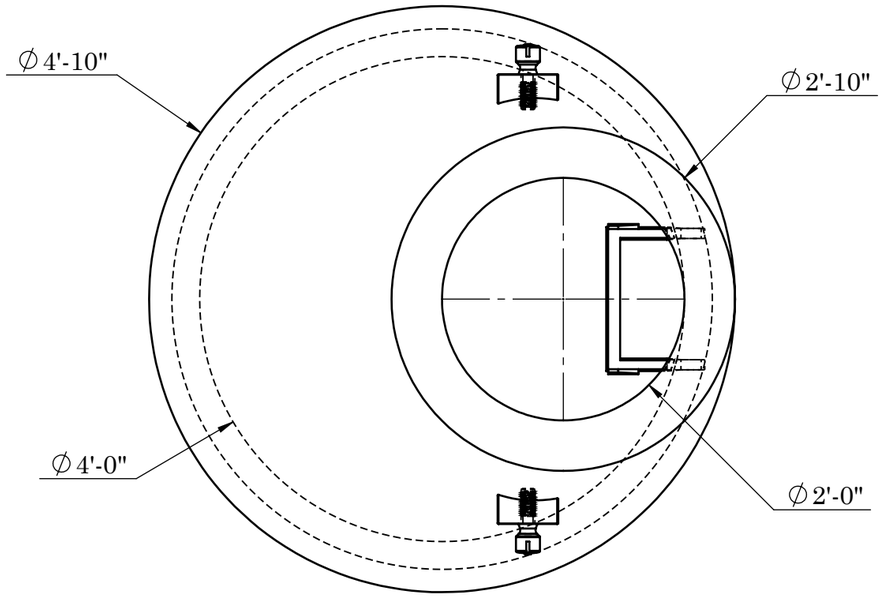

TOP VIEW

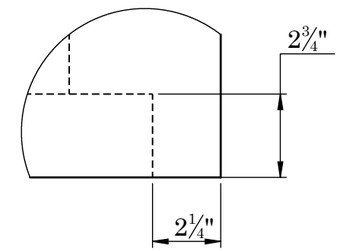

SHIPLAP DETAIL B

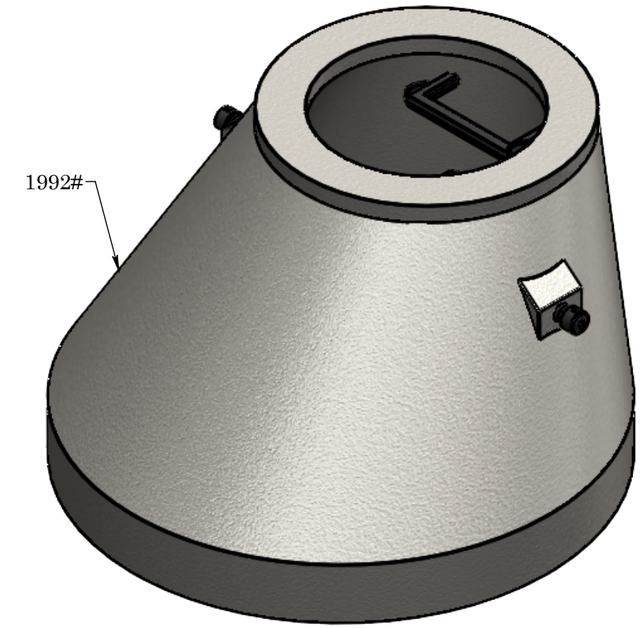

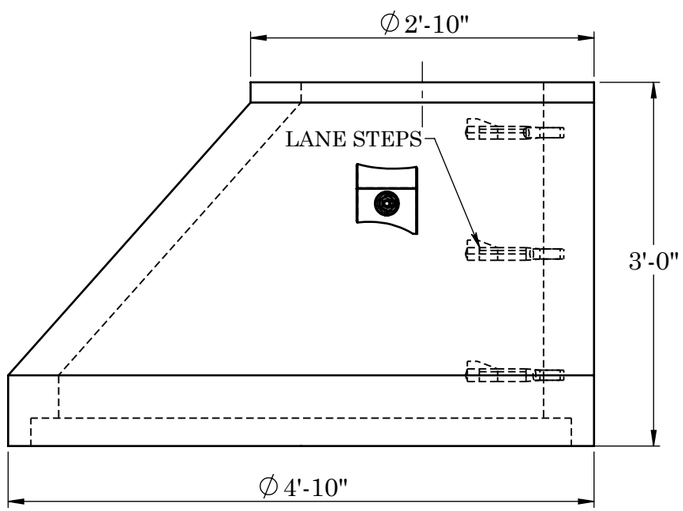

FRONT VIEW

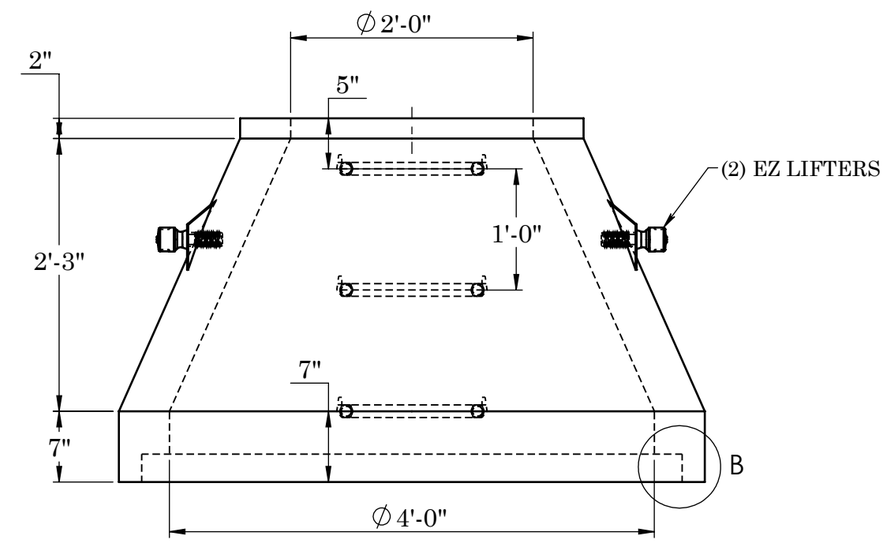

SIDE VIEW

REINFORCEMENT:

-PF 4"X8" W4/W1.7 MESH AROUND SPIGGOT
-STRUCTURAL FIVER THROUGHOUT

2215 E. BROOKLYN AVE
SPOKANE, WA 99217
TOLL FREE 1-800-888-4573
(509) 325-4573 FAX (509) 325-5098
SPOKANE - LEWISTON - YAKIMA
www.wilbertprecast.com

REV: A
DRAWN FOR:
DRAWN BY: TH

TITLE: Ø48" MANHOLE 3' ECCENTRIC CONE

SIZE	DWG. NO.	SCALE:	DATE:
B	480E-3	NTS	10/3/2025