WARRANTY - ALL TANKS MUST BE BACKFILLED AND COMPACTED PRIOR TO FILLING OR WARRANTY IS VOID.

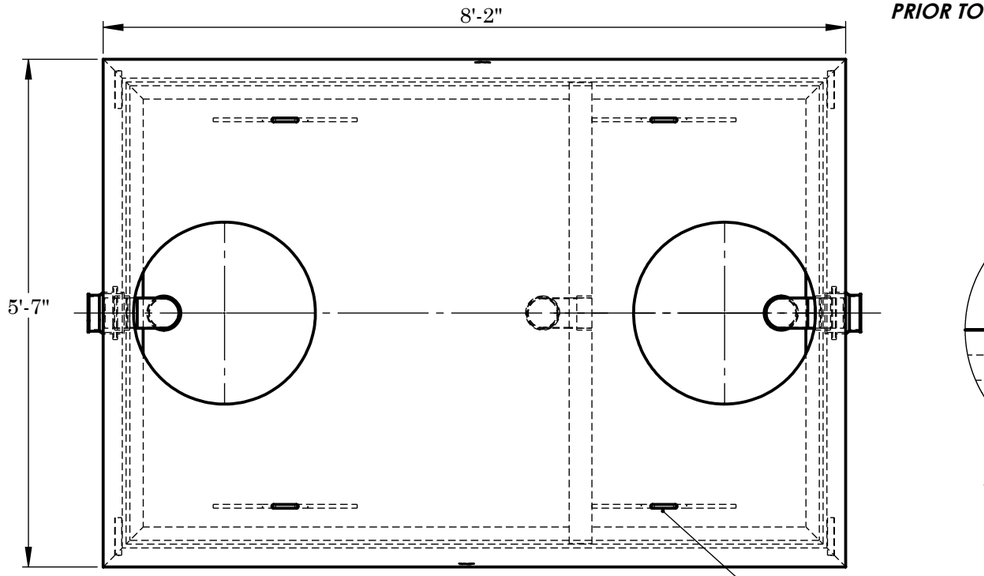

TOP VIEW

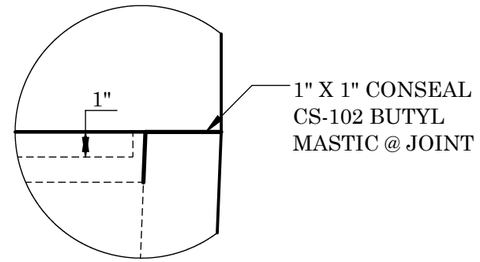

JOINT DETAIL A

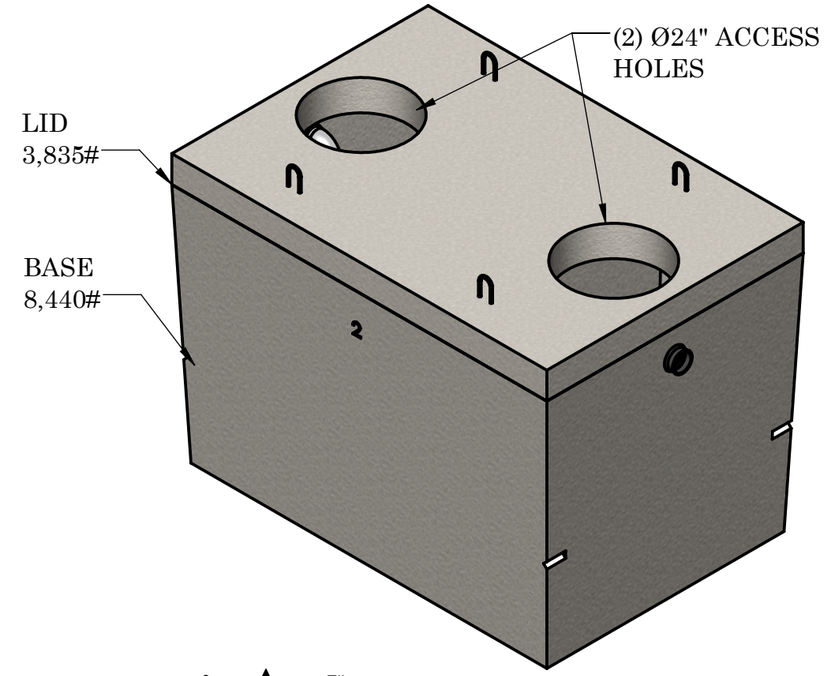

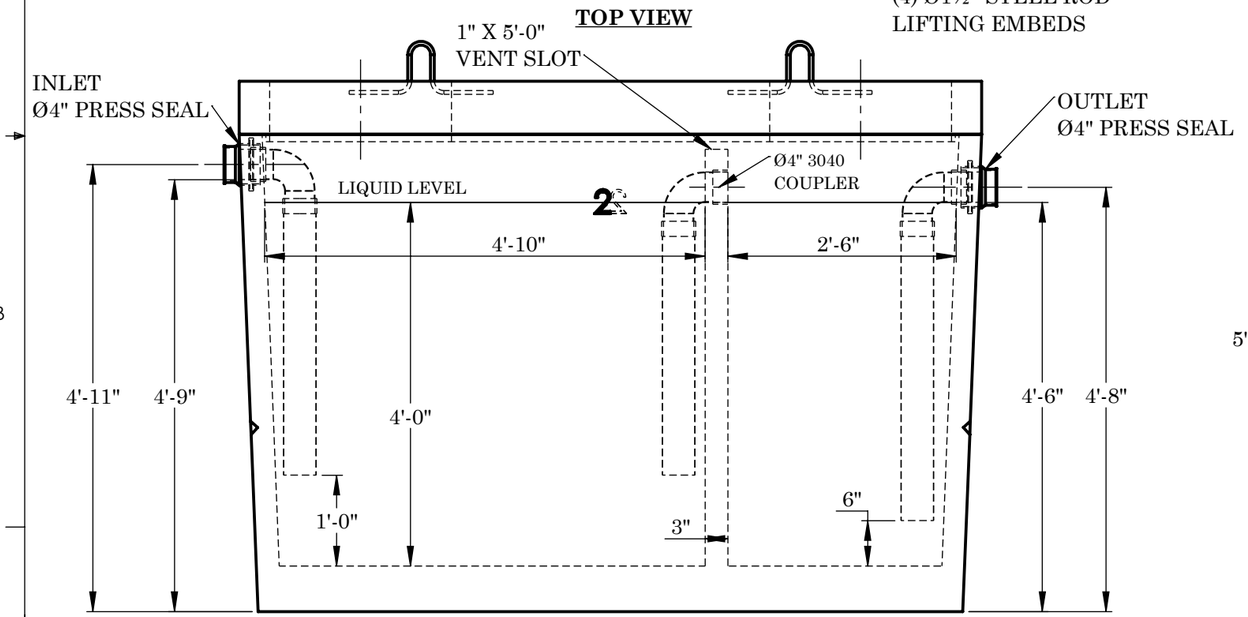

FRONT VIEW

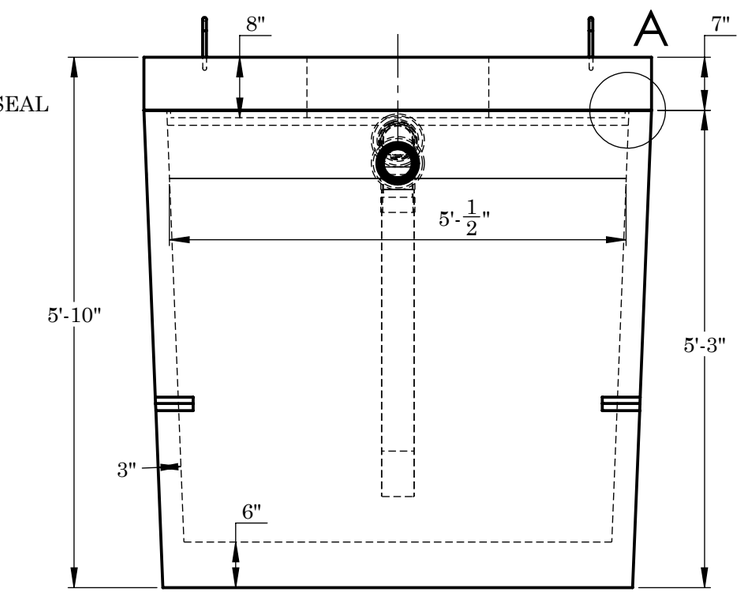

SIDE VIEW

CONCRETE:
TANK CONSTRUCTION UTILIZES 4000 PSI CONCRETE AND GRADE 60 REBAR.

GALLON CALCS:
5'-½"W x 4'-10"L x 4'-0"H x 7.48= 729 GALLONS
5'-½"W x 2'-6" x 4'-0"H x 7.48= 377 GALLONS

RISERS:
PVC: Ø24" & FIBER COVER (TO GRADE)
CONCRETE: Ø24" x 8" OR 12" (6" BELOW GRADE)

BEDDING:
4" PEA GRAVEL (NO WATER PRESENT)

EXCAVATION:
12" LARGER EACH WAY THAN TANK DIM.
MAX COVER ON TOP 3'-0"

NOTES:
REINFORCING:
- #4 BARS @ 5" O.C.E.W. IN TOP, (2) #4 EACH SIDE OF ACCESS
- 6x6 10 GA WIRE MESH IN WALLS UP 12" FROM BOTTOM
- 6x6 10 GA WIRE MESH IN BASE
-#4 BARS @ 8" O.C.E.W IN BASE

2215 E. BROOKLYN AVE
SPOKANE, WA 99217
TOLL FREE 1-800-888-4573
(509) 325-4573 FAX (509) 325-5098
SPOKANE - LEWISTON - YAKIMA
www.wilbertprecast.com

DRAWN BY: TH

TITLE: 1000 GALLON OIL WATER SEPARATOR
MONO DOUBLE COMPARTMENT HEAVY - IDAHO

SIZE	DWG. NO.	SCALE:	DATE:
B	#1627MOWTBI 4"	NTS	4/18/2025