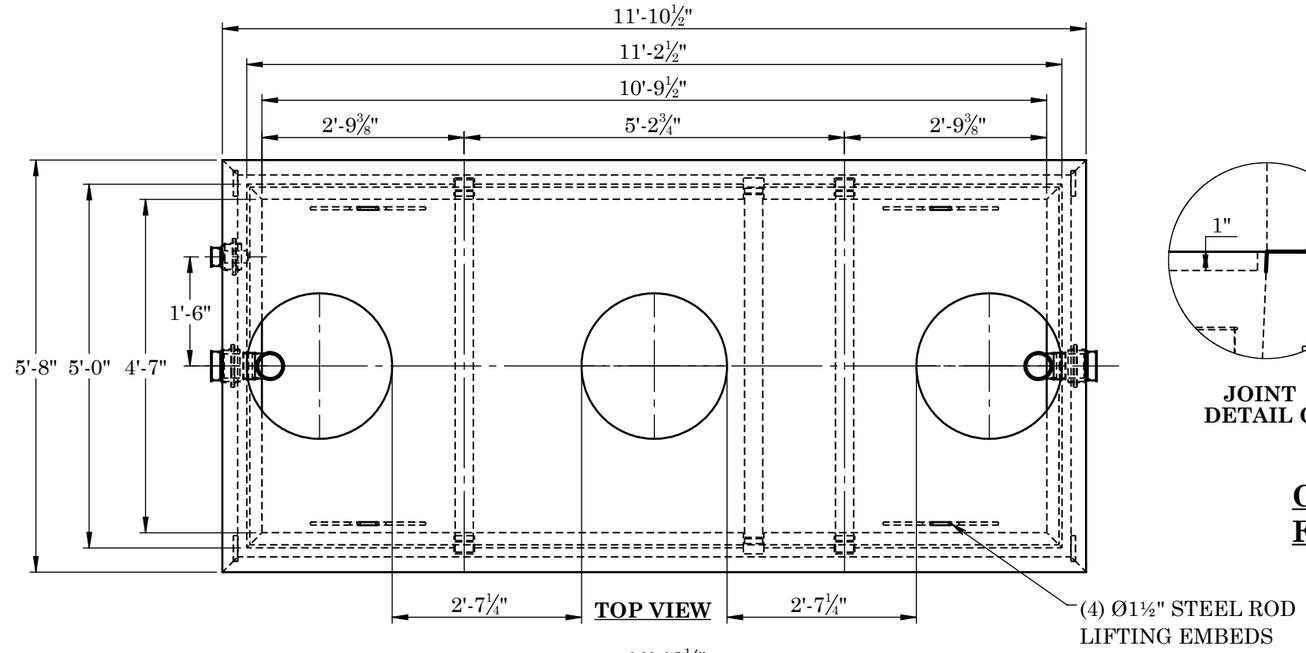

TOP VIEW

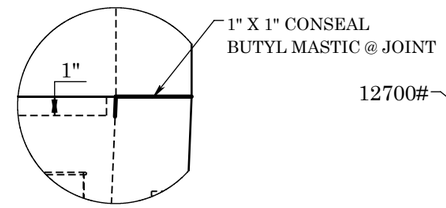

JOINT DETAIL C

TOTAL WEIGHT
18329#

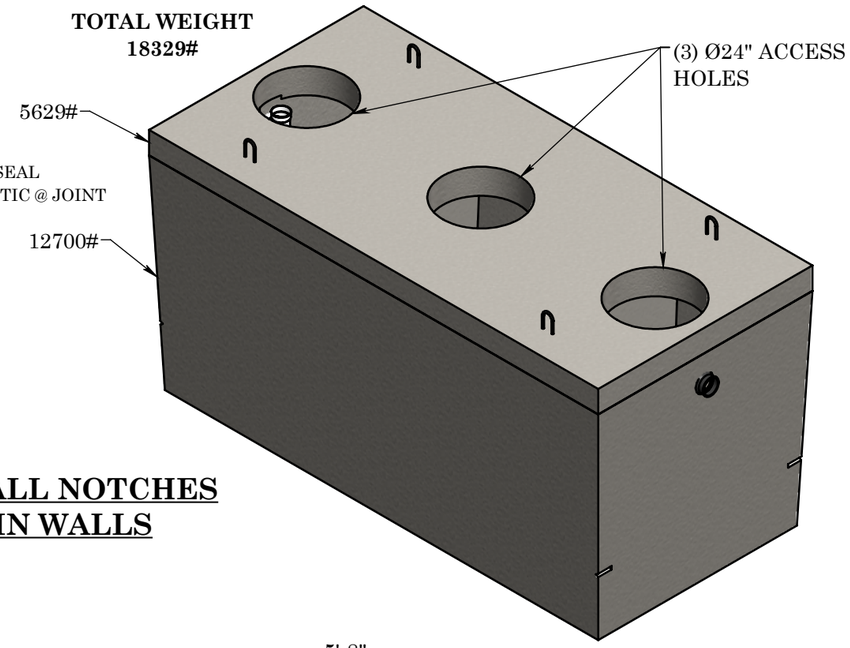

CS 1800 IN ALL NOTCHES
FOR DROP IN WALLS

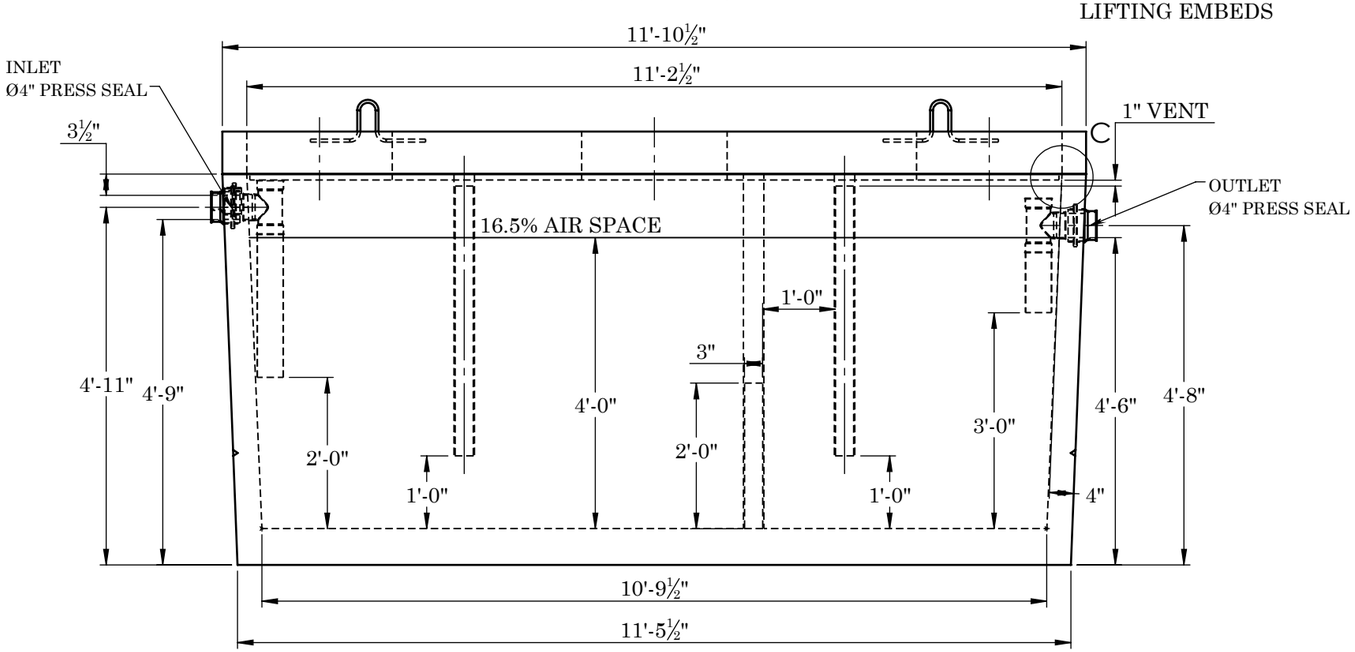

FRONT VIEW

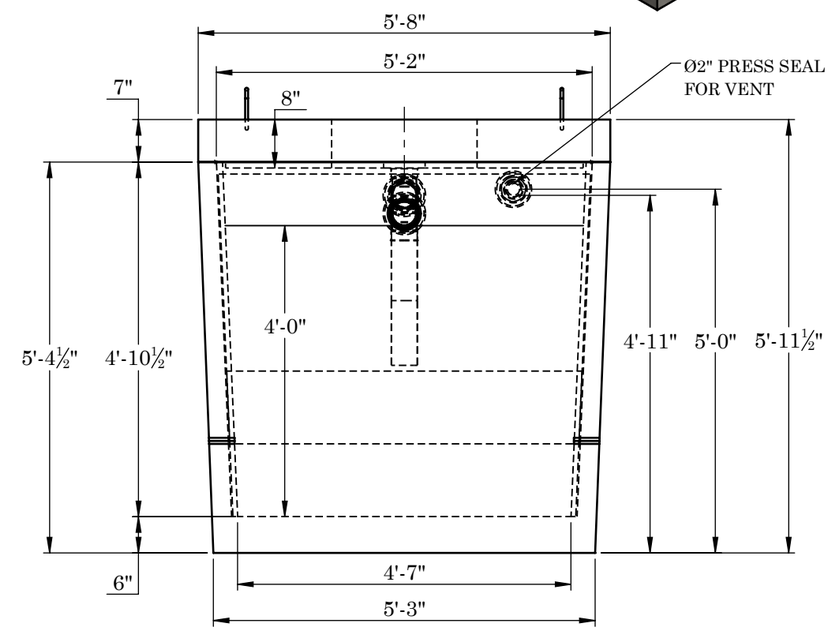

SIDE VIEW

REINFORCEMENT:

-WALLS -#4 BAR @ 6" O.C. VERTICAL
-#4 BAR @ 10" O.C. HORIZONTAL

-BASE -#4 BAR @ 6" O.C. TRANSVERSE
(2" CLR FROM TOP)
-#4 BAR @ 10" O.C. LONGITUDINAL
-LID -#4 BAR @ 12" O.C. LONGITUDINAL
-#5 BAR @ 6" O.C. TRANSVERSE
-DROP IN WALLS #3 BAR @ 9" O.C.E.W. CENTERED

2215 E. BROOKLYN AVE
SPOKANE, WA 99217
TOLL FREE 1-800-888-4573
(509) 325-4573 FAX (509) 325-5098
SPOKANE - LEWISTON - YAKIMA
www.wilbertprecast.com

REV: A
DRAWN FOR:
DRAWN BY: DCR

TITLE: 1500 GALLON OIL/WATER SEPERATOR
TRAFFIC RATED

SIZE	DWG. NO.	SCALE:	DATE:
B	**#1634MOWTB-Spo.Co.-4**	NTS	12/17/2025