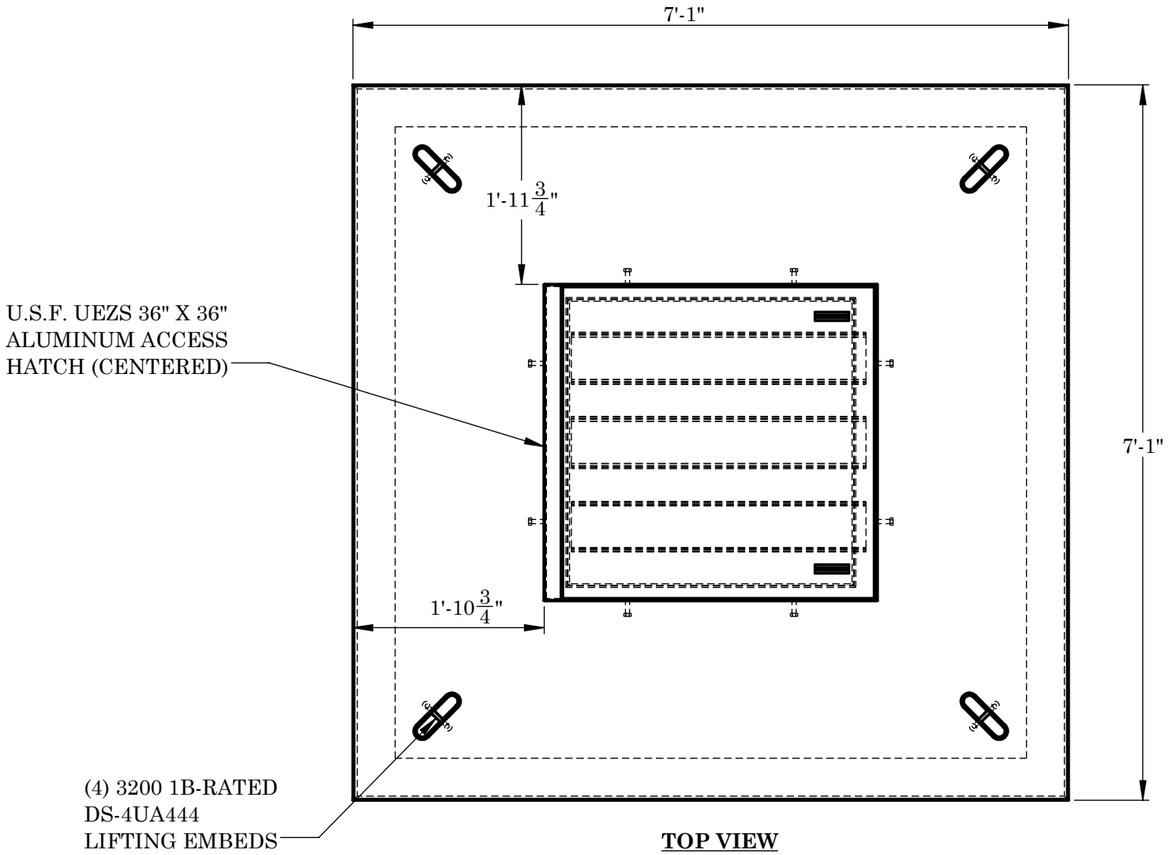

TOP VIEW

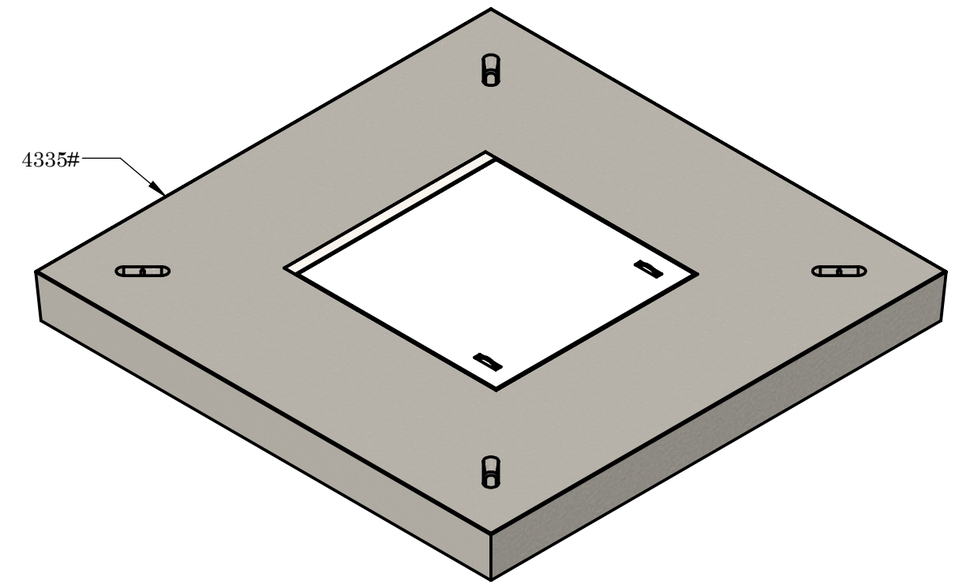

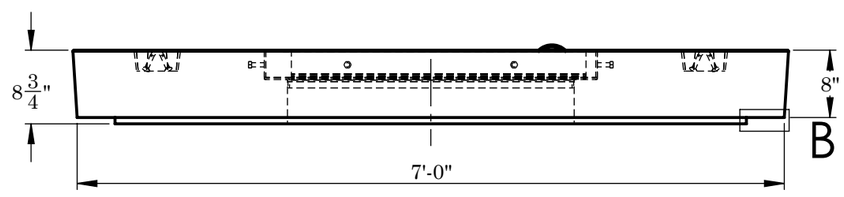

FRONT VIEW

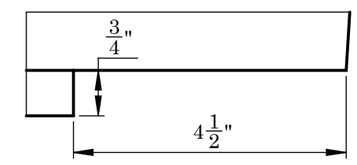

SHIPLAP
DETAIL B

REINFORCEMENT:

-TOP MAT #4 @ 12" O.C.E.W MAX
2" FROM TOP
-BOTTTOM MAT #4 @ 6" O.C.E.W MAX
2" FROM BOTTOM

2215 E. BROOKLYN AVE
SPOKANE, WA 99217
TOLL FREE 1-800-888-4573
(509) 325-4573 FAX (509) 325-5098
SPOKANE - LEWISTON - YAKIMA
www.wilbertprecast.com

DRAWN BY: TH

TITLE:			
7'-0" x 7'-0" WP77 VAULT LID W/ SINGLE DOOR HATCH			
SIZE	DWG. NO.	SCALE:	DATE:
B	WP77THS	NTS	1/12/2026